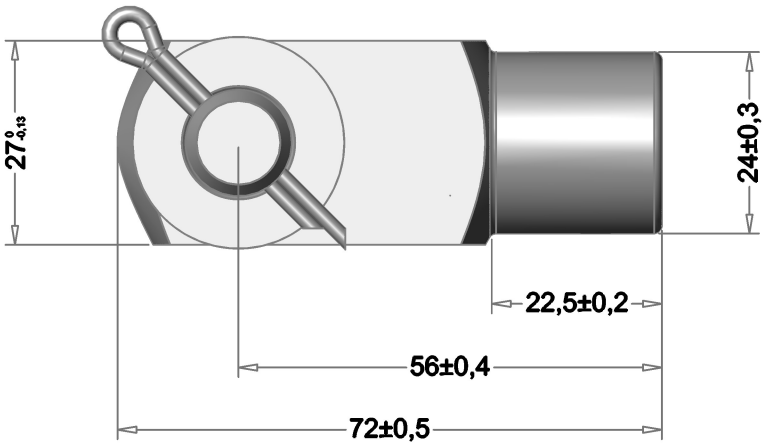

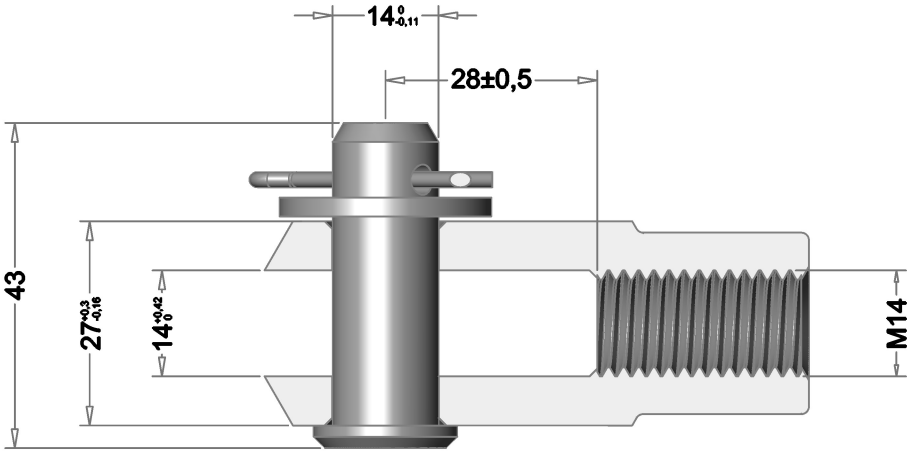

(2:1)

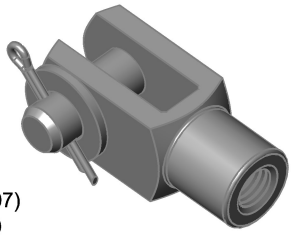

1- Clevis (CV113)
2- Bolt (CB307)
3- Flat Washer (CA507)
4- Cotter Pin (CA407)

No sharp ends, no burrs, no significant surface defects.
General Tolerances DIN ISO 2768-medium

(C) MK Material Oto. San. ve Tic. Ltd. Şti. All rights reserved.

Mea.	Tolerance	T. Max. Dim.	T. Min. Dim.	Material	Note
				11SMnPb30	-
	Name	Date	Signature	Plating	Quality control: ( ) Product accepted. ( ) Product rejected. ( ) Product accepted conditionally. Date:
Drawed By				Zn/White	
Checked By					
Approved By					
Scale	Drawing No / Company Name			Rev. No	
1:1	CC313			01	