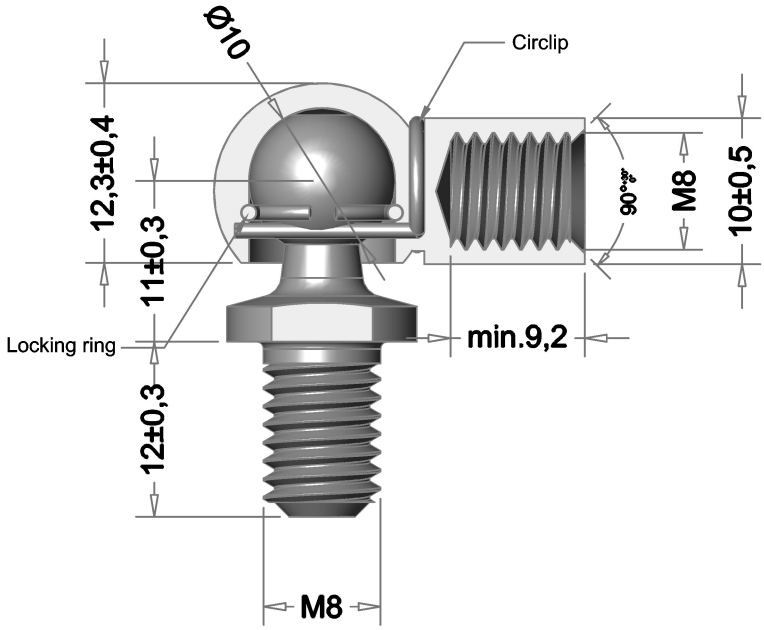



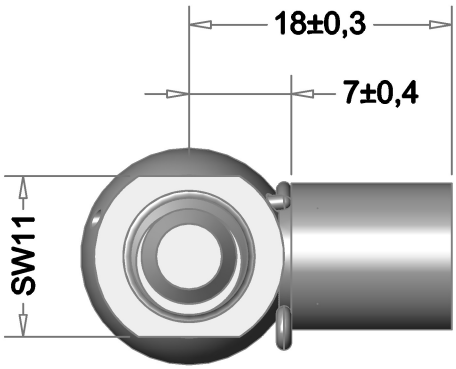

(1:1)

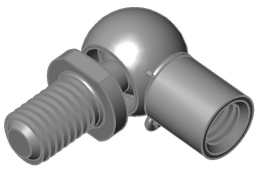

1- Ball socket (BH110188)
2- Ball stud (BS213128.0)

General Tolerances DIN ISO 2768-medium

(C) MK Material Oto. San. ve Tic. Ltd. Şti. All rights reserved.

Mea.	Tolerance	T. Max. Dim.	T. Min. Dim.	Material	Note
				11SMnPb30	-
	Name	Date	Signature	Plating	Quality control: ( ) Product accepted. ( ) Product rejected. ( ) Product accepted conditionally. Date:
Drawed By				Zn/White	
Checked By					
Approved By					
Scale	Drawing No / Company Name			Rev. No	
2:1	BJ210188.128			00	